GDM1602K

SPECIFICATIONS OF LCD MODULE

Features

1. 5x8 dots with cursor
2. Built-in controller (KS0066U or equivalent)
3. Easy interface with 4-bit or 8-bit MPU
4. +5V power supply (also available for =3.0V)
5. 1/16 duty cycle
6. N.V. optional
7. BKL to be driven by pin1, pin2, or pin15, pin16 or A, K

Outline dimension

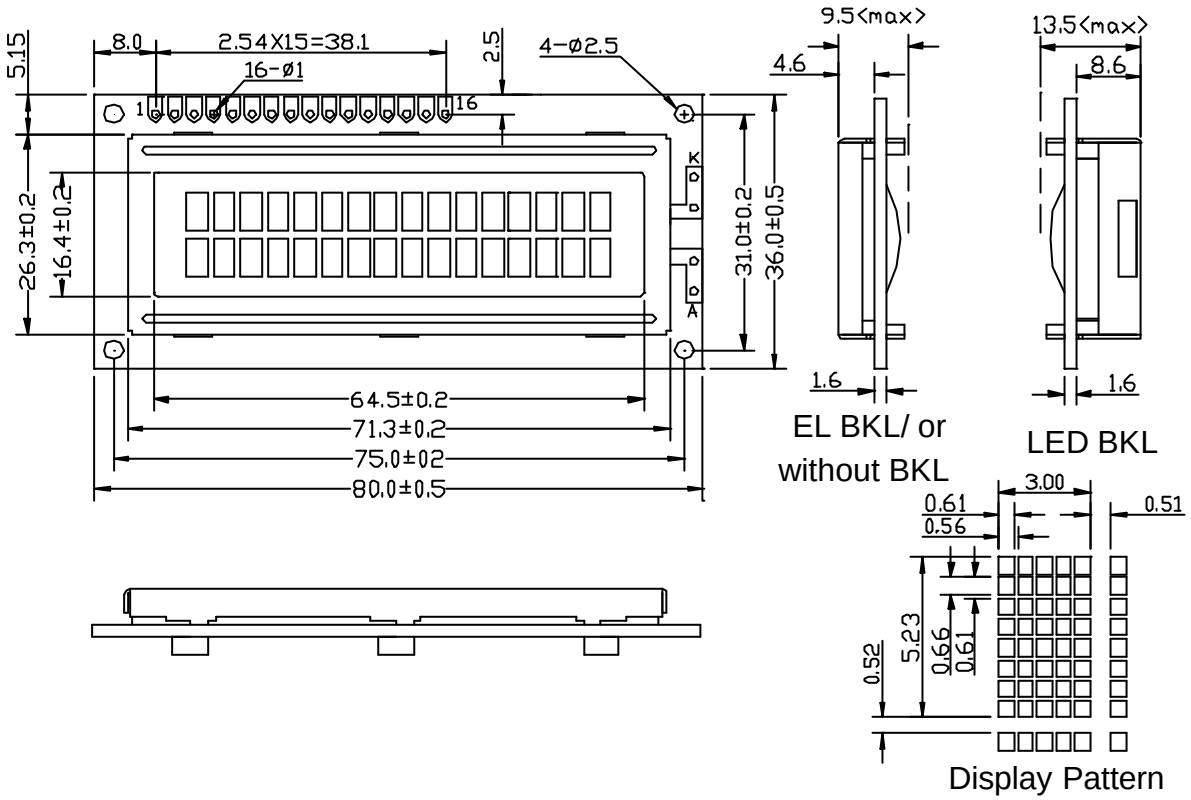

Absolute maximum ratings

Item	Symbol	Standard			Unit
Power voltage	V_{DD}-V_{SS}	0	-	7.0	V
Input voltage	VIN	VSS	-	VDD	
Operating temperature range	VOP	0	-	+50	℃
Storage temperature range	VST	-20	-	+60	

*Wide temperature range is available
(operating/storage temperature as –20~+70/-30~+80℃)

Block diagram

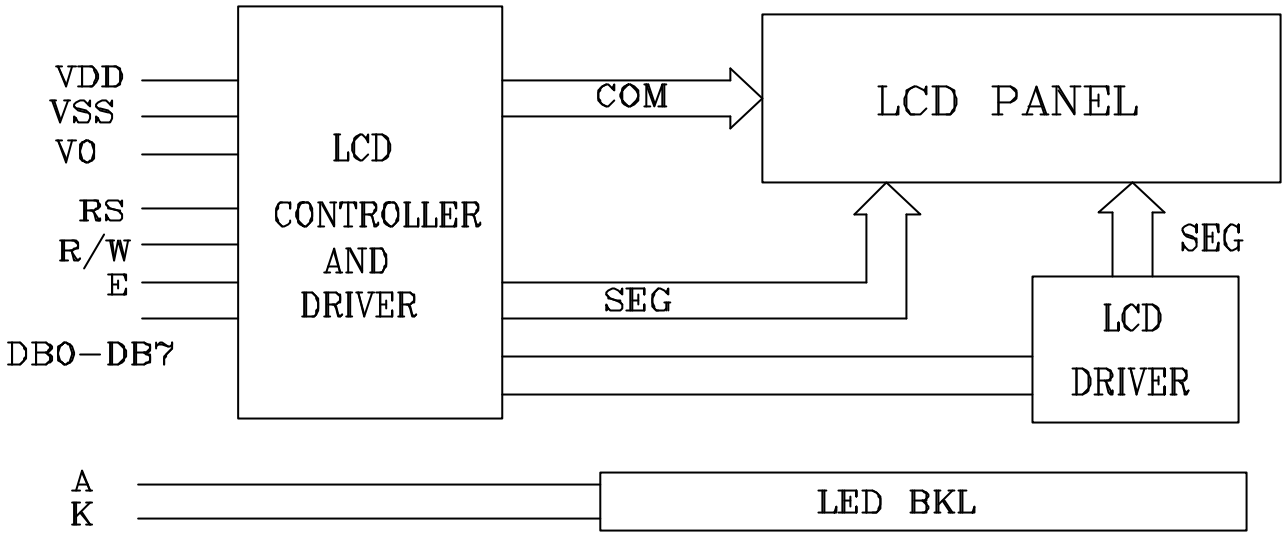

Interface pin description

Pin no.	Symbol	External connection	Function
1	V_{SS}	Power supply	Signal ground for LCM (GND)
2	V_{DD}		Power supply for logic (+5V) for LCM
3	V_0		Contrast adjust
4	RS	MPU	Register select signal
5	R/W	MPU	Read/write select signal
6	E	MPU	Operation (data read/write) enable signal
7~10	DB0~DB3	MPU	Four low order bi-directional three-state data bus lines. Used for data transfer between the MPU and the LCM. These four are not used during 4-bit operation.
11~14	DB4~DB7	MPU	Four high order bi-directional three-state data bus lines. Used for data transfer between the MPU
15	LED+	LED BKL power supply	Power supply for BKL “A” (+4.2V)
16	LED-		Power supply for BKL “K” (GND)

Contrast adjust

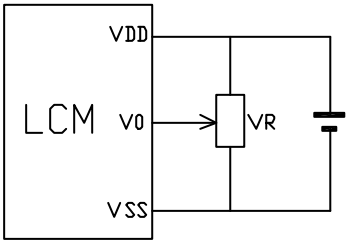

V_{DD}~V_0: LCD Driving voltage
VR: 10k~20k

Optical characteristics

TN type display module (Ta=25℃, VDD=5.0V)

Item	Symbol	Condition	Min.	Typ.	Max.	Unit
Viewing angle	θ	$C_r \geqslant 4$	-25	-	-	deg
	Φ		-30	-	30	
Contrast ratio	C_r		-	2	-	-
Response time (rise)	T_r	-	-	120	150	ms
Response time (fall)	T_r	-	-	120	150	

STN type display module (Ta=25℃, VDD=5.0V)

Item	Symbol	Condition	Min.	Typ.	Max.	Unit
Viewing angle	θ	$C_r \geqslant 2$	-60	-	35	deg
	Φ		-40	-	40	
Contrast ratio	C_r		-	6	-	-
Response time (rise)	T_r	-	-	150	250	ms
Response time (fall)	T_r	-	-	150	250	

Electrical characteristics

DC characteristics

Parameter	Symbol	Conditions	Min.	Typ.	Max.	Unit
Supply voltage for LCD	V_{DD}-V_0	Ta =25℃	-	4.6	-	V
Input voltage	V_{DD}		4.7	-	5.5	
Supply current	I_{DD}	Ta=25℃, V_{DD}=5.0V	-	1.5	2.5	mA
Input leakage current	I_{LKG}		-	-	1.0	uA
“H” level input voltage	V_{IH}		2.2	-	V_{DD}	V
“L” level input voltage	V_{IL}	Twice initial value or less	0	-	0.6	
“H” level output voltage	V_{OH}	LOH=-0.25mA	2.4	-	-	
“L” level output voltage	V_{OL}	LOH=1.6mA	-	-	0.4	
Backlight supply voltage	V_F		-	4.2	4.6	

Read cycle (Ta=25℃, VDD=5.0V)

Parameter	Symbol	Test pin	Min.	Typ.	Max.	Unit
Enable cycle time	t_c	E	500	-	-	ns
Enable pulse width	t_w		300	-	-	
Enable rise/fall time	t_r, t_f		-	-	25	
RS; R/W setup time	t_{su}	RS; R/W	100	-	-	
RS; R/W address hold time	t_h	RS; R/W	10	-	-	
Read data output delay	t_d	DB0~DB7	60	-	90	
Read data hold time	t_{dh}		20	-	-	

Write cycle (Ta=25℃, VDD=5.0V)

Parameter	Symbol	Test pin	Min.	Typ.	Max.	Unit
Enable cycle time	t_c	E	500	-	-	ns
Enable pulse width	t_w		300	-	-	
Enable rise/fall time	t_r, t_f		-	-	25	
RS; R/W setup time	t_{su1}	RS; R/W	100	-	-	
RS; R/W address hold time	t_{h1}	RS; R/W	10	-	-	
Read data output delay	t_{su2}	DB0~DB7	60	-	-	
Read data hold time	t_{h2}		10	-	-	

Write mode timing diagram

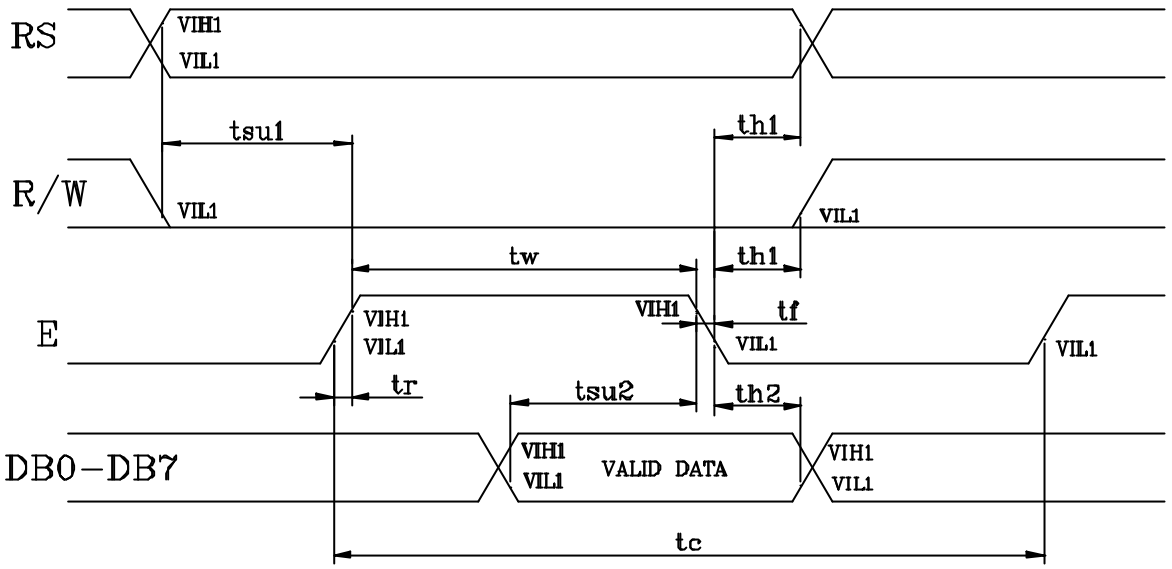

Read mode timing diagram

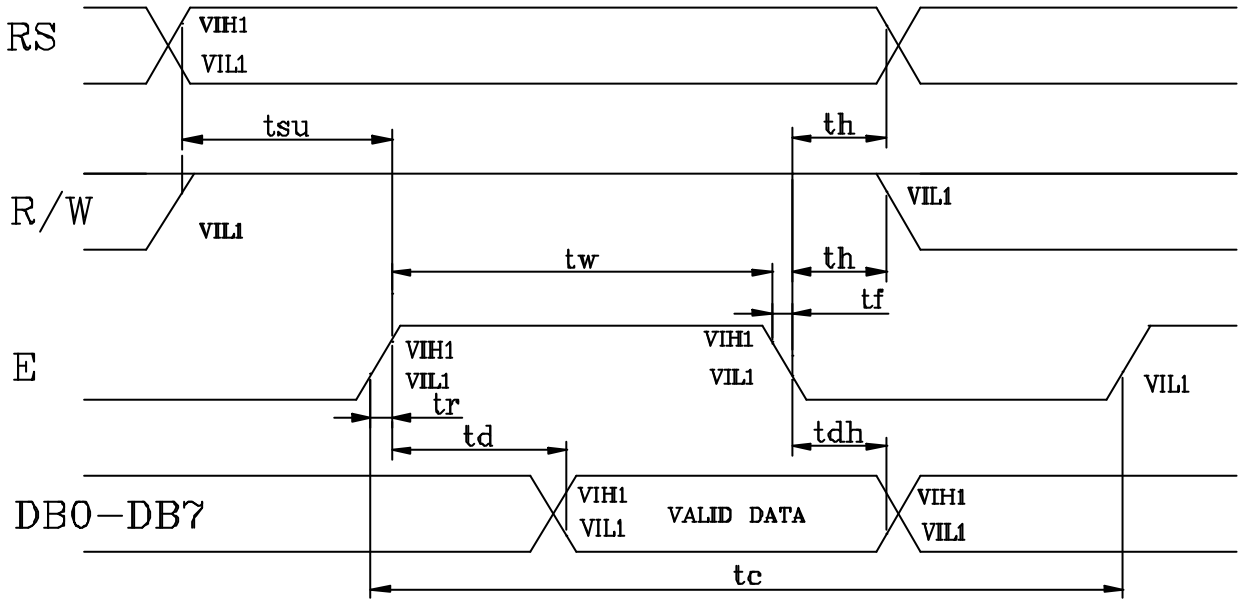

Instruction description

Outline

To overcome the speed difference between the internal clock of KS0066U and the MPU clock, KS0066U performs internal operations by storing control in formations to IR or DR. The internal operation is determined according to the signal from MPU, composed of read/write and data bus (Refer to Table7).

Instructions can be divided largely into four groups:

1) KS0066U function set instructions (set display methods, set data length, etc.)
2) Address set instructions to internal RAM
3) Data transfer instructions with internal RAM
4) Others

The address of the internal RAM is automatically increased or decreased by 1.

Note: during internal operation, busy flag (DB7) is read “High”.

Busy flag check must be preceded by the next instruction.

Instruction Table

Instruction	Instruction code										Description	Execution time (fosc= 270 KHZ
	RS	R/W	DB7	DB6	DB5	DB4	DB3	DB2	DB1	DB0		
Clear Display	0	0	0	0	0	0	0	0	0	1	Write "20H" to DDRA and set DDRAM address to "00H" from AC	1.53ms
Return Home	0	0	0	0	0	0	0	0	1	-	Set DDRAM address to "00H" From AC and return cursor to Its original position if shifted. The contents of DDRAM are not changed.	1.53ms
Entry mode Set	0	0	0	0	0	0	0	1	I/D	SH	Assign cursor moving direction And blinking of entire display	39us
Display ON/ OFF control	0	0	0	0	0	0	1	D	C	B	Set display (D), cursor (C), and Blinking of cursor (B) on/off Control bit.	
Cursor or Display shift	0	0	0	0	0	1	S/C	R/L	-	-	Set cursor moving and display Shift control bit, and the Direction, without changing of DDRAM data.	39us
Function set	0	0	0	0	1	DL	N	F	-	-	Set interface data length (DL: 8-Bit/4-bit), numbers of display Line (N: =2-line/1-line) and, Display font type (F: 5x11/5x8)	39us
Set CGRAM Address	0	0	0	1	AC5	AC4	AC3	AC2	AC1	AC0	Set CGRAM address in address Counter.	39us
Set DDRAM Address	0	0	1	AC6	AC5	AC4	AC3	AC2	AC1	AC0	Set DDRAM address in address Counter.	39us
Read busy Flag and Address	0	1	BF	AC6	AC5	AC4	AC3	AC2	AC1	AC0	Whether during internal Operation or not can be known By reading BF. The contents of Address counter can also be read.	0us
Write data to Address	1	0	D7	D6	D5	D4	D3	D2	D1	D0	Write data into internal RAM (DDRAM/CGRAM).	43us
Read data From RAM	1	1	D7	D6	D5	D4	D3	D2	D1	D0	Read data from internal RAM (DDRAM/CGRAM).	43us

NOTE:

When an MPU program with checking the busy flag (DB7) is made, it must be necessary 1/2fosc is necessary for executing the next instruction by the falling edge of the "E" signal after the busy flag (DB7) goes to "Low".

Contents

1) Clear display

RS	R/W	DB7	DB6	DB5	DB4	DB3	DB2	DB1	DB0
0	0	0	0	0	0	0	0	0	1

Clear all the display data by writing "20H" (space code) to all DDRAM address, and set DDRAM address to "00H" into AC (address counter).

Return cursor to the original status, namely, bring the cursor to the left edge on the fist line of the display.

Make the entry mode increment (I/D="High").

2) Return home

RS	R/W	DB7	DB6	DB5	DB4	DB3	DB2	DB1	DB0
0	0	0	0	0	0	0	0	1	-

Return home is cursor return home instruction.
Set DDRAM address to "00H" into the address counter.
Return cursor to its original site and return display to its original status, if shifted.
Contents of DDRAM does not change.

3) Entry mode set

RS	R/W	DB7	DB6	DB5	DB4	DB3	DB2	DB1	DB0
0	0	0	0	0	0	0	0	I/D	SH

Set the moving direction of cursor and display.

I/D: increment / decrement of DDRAM address (cursor or blink)
When I/D="high", cursor/blink moves to right and DDRAM address is increased by 1.
When I/D="Low", cursor/blink moves to left and DDRAM address is increased by 1.
*CGRAM operates the same way as DDRAM, when reading from or writing to CGRAM.

SH: shift of entire display
When DDRAM read (CGRAM read/write) operation or SH="Low", shifting of entire display is not performed. If SH ="High" and DDRAM write operation, shift of entire display is performed according to I/D value. (I/D="high". shift left, I/D="Low". Shift right).

4) Display ON/OFF control

RS	R/W	DB7	DB6	DB5	DB4	DB3	DB2	DB1	DB0
0	0	0	0	0	0	1	D	C	B

Control display/cursor/blink ON/OFF 1 bit register.

D: Display ON/OFF control bit
When D="High", entire display is turned on.
When D="Low", display is turned off, but display data remains in DDRAM.

C: cursor ON/OFF control bit
When D="High", cursor is turned on.
When D="Low", cursor is disappeared in current display, but I/D register preserves its data.

B: Cursor blink ON/OFF control bit
When B="High", cursor blink is on, which performs alternately between all the "High" data and display characters at the cursor position.
When B="Low", blink is off.

5) Cursor or display shift

RS	R/W	DB7	DB6	DB5	DB4	DB3	DB2	DB1	DB0
0	0	0	0	0	1	S/C	R/L	-	-

Shifting of right/left cursor position or display without writing or reading of display data.
This instruction is used to correct or search display data.
During 2-line mode display, cursor moves to the 2nd line after the 40th digit of the 1st line.
Note that display shift is performed simultaneously in all the lines.
When display data is shifted repeatedly, each line is shifted individually.
When display shift is performed, the contents of the address counter are not changed.

Shift patterns according to S/C and R/L bits

S/C	R/L	Operation
0	0	Shift cursor to the left, AC is decreased by 1
0	1	Shift cursor to the right, AC is increased by 1
1	0	Shift all the display to the left, cursor moves according to the display
1	1	Shift all the display to the right, cursor moves according to the display

6) Function set

RS	R/W	DB7	DB6	DB5	DB4	DB3	DB2	DB1	DB0
0	0	0	0	1	DL	N	F	-	-

DL: Interface data length control bit

When DL="High", it means 8-bit bus mode with MPU.
When DL="Low", it means 4-bit bus mode with MPU. Hence, DL is a signal to select 8-bit or 4-bit bus mode.
When 4-but bus mode, it needs to transfer 4-bit data twice.

N: Display line number control bit

When N="Low", 1-line display mode is set.
When N="High", 2-line display mode is set.

F: Display line number control bit

When F="Low", 5x8 dots format display mode is set.
When F="High", 5x11 dots format display mode.

7) Set CGRAM address

RS	R/W	DB7	DB6	DB5	DB4	DB3	DB2	DB1	DB0
0	0	0	1	AC5	AC4	AC3	AC2	AC1	AC0

Set CGRAM address to AC.
The instruction makes CGRAM data available from MPU.

8) Set DDRAM address

RS	R/W	DB7	DB6	DB5	DB4	DB3	DB2	DB1	DB0
0	0	1	AC6	AC5	AC4	AC3	AC2	AC1	AC0

Set DDRAM address to AC.
This instruction makes DDRAM data available form MPU.
When 1-line display mode (N=LOW), DDRAM address is form "00H" to "4FH".In 2-line display mode (N=High), DDRAM address in the 1st line form "00H" to "27H", and DDRAM address in the 2nd line is

from “40H” to “67H”.

9) **Read busy flag & address**

RS	R/W	DB7	DB6	DB5	DB4	DB3	DB2	DB1	DB0
0	1	BF	AC6	AC5	AC4	AC3	AC2	AC1	AC0

This instruction shows whether KS0066U is in internal operation or not.
If the resultant BF is “High”, internal operation is in progress and should wait BF is to be LOW, which by then the nest instruction can be performed. In this instruction you can also read the value of the address counter.

10) Write data to RAM

RS	R/W	DB7	DB6	DB5	DB4	DB3	DB2	DB1	DB0
1	0	D7	D6	D5	D4	D3	D2	D1	D0

Write binary 8-bit data to DDRAM/CGRAM.
The selection of RAM from DDRAM, and CGRAM, is set by the previous address set instruction (DDRAM address set, CGRAM address set).
RAM set instruction can also determine the AC direction to RAM.
After write operation. The address is automatically increased/decreased by 1, according to the entry mode.

11) Read data from RAM

RS	R/W	DB7	DB6	DB5	DB4	DB3	DB2	DB1	DB0
1	1	D7	D6	D5	D4	D3	D2	D1	D0

Read binary 8-bit data from DDRAM/CGRAM.

The selection of RAM is set by the previous address set instruction. If the address set instruction of RAM is not performed before this instruction, the data that has been read first is invalid, as the direction of AC is not yet determined. If RAM data is read several times without RAM address instructions set before, read operation, the correct RAM data can be obtained from the second. But the first data would be incorrect, as there is no time margin to transfer RAM data.

In case of DDRAM read operation, cursor shift instruction plays the same role as DDRAM address set instruction, it also transfers RAM data to output data register.

After read operation, address counter is automatically increased/decreased by 1 according to the entry mode.

After CGRAM read operation, display shift may not be executed correctly.

NOTE: In case of RAM write operation, AC is increased/decreased by 1 as in read operation.

At this time, AC indicates next address position, but only the previous data can be read by the read instruction.

Display character address code:

Display position	1	2	3	4	5	6	7	8	9	10	11	12	13	14	15	16
DDRAM address	00	01	02	03	04	05	06	07	08	09	0A	0B	0C	0D	0E	0F
DDRAM address	40	41	42	43	44	45	46	47	48	49	4A	4B	4C	4D	4E	4F

Standard character pattern

Lower 4 Bits \ Upper 4 Bits	0000	0001	0010	0011	0100	0101	0110	0111	1000	1001	1010	1011	1100	1101	1110	1111
xxxx0000	CG RAM (1)			0	@	P	`	p				ー	タ	ミ	α	p
xxxx0001	(2)		!	1	A	Q	a	q			。	ア	チ	ム	ä	q
xxxx0010	(3)		"	2	B	R	b	r			「	イ	ツ	メ	ß	θ
xxxx0011	(4)		#	3	C	S	c	s			」	ウ	テ	モ	ε	∞
xxxx0100	(5)		$	4	D	T	d	t			、	エ	ト	ヤ	μ	Ω
xxxx0101	(6)		%	5	E	U	e	u			・	オ	ナ	ユ	σ	ü
xxxx0110	(7)		&	6	F	V	f	v			ヲ	カ	ニ	ヨ	ρ	Σ
xxxx0111	(8)		'	7	G	W	g	w			ァ	キ	ヌ	ラ	g	π
xxxx1000	(1)		(	8	H	X	h	x			ィ	ク	ネ	リ	√	x̄
xxxx1001	(2)		)	9	I	Y	i	y			ゥ	ケ	ノ	ル	-1	y
xxxx1010	(3)		*	:	J	Z	j	z			ェ	コ	ハ	レ	j	千
xxxx1011	(4)		+	;	K	[	k	{			ォ	サ	ヒ	ロ	×	万
xxxx1100	(5)		,	<	L	¥	l	|			ャ	シ	フ	ワ	¢	円
xxxx1101	(6)		−	=	M	]	m	}			ュ	ス	ヘ	ン	£	÷
xxxx1110	(7)		.	>	N	^	n	→			ョ	セ	ホ	゛	ñ	
xxxx1111	(8)		/	?	O	_	o	←			ッ	ソ	マ	゜	ö	■